Cablofil
FAS CENTER HANGER-PAINTED (6D,2W,16L)
Part No. 934051

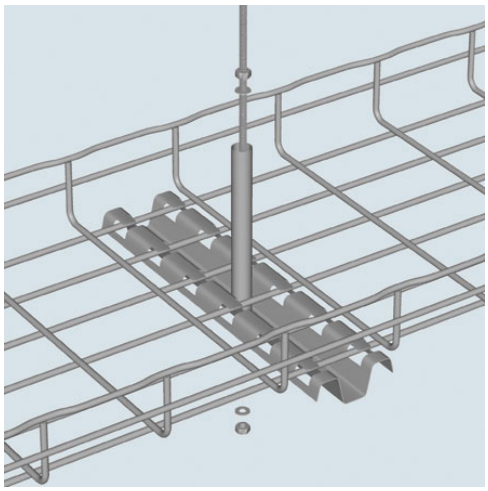

Cablofil Wiremesh Cable Tray concept based upon performance, safety and economy

Features & Benefits

three qualities which make Cablofil Wiremesh Cable Tray system preferred by installers. Cablofil adapts to the most complex configurations, and its structure gives maximum strength for minimum weight. The ease of creating fittings, carried out on site, as well as the wide range of unique and universal accessories gives complete freedom in routing combined with exceptionally fast installation.

Specifications

General Info

Product Line	Cablofil	Finish	Custom Painted
UPC Number	800388008229	Country Of Origin	United States

Dimensions

Product Width US	2.67 in	Product Weight US	1.15 lb
Product Volume US	0.142 cu ft	Product Depth US	15.51 in
Product Height US	5.91 in		

Buy American Act Compliance

BAA	Yes