Cablofil

###EOL### CABLOFIL COVER-PAINTED (1H,16W,39L) (3 PCS)

Part No. 934081

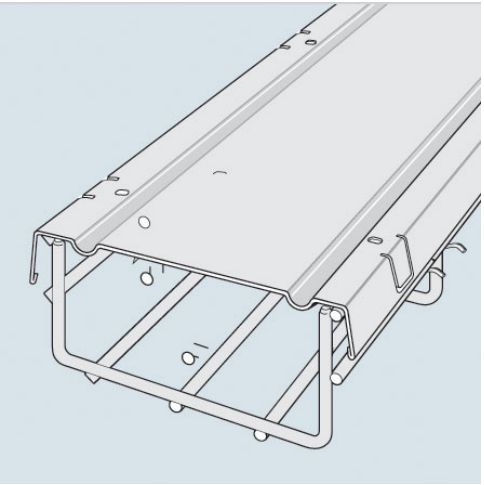

Cablofil Wiremesh Cable Tray concept based upon performance, safety and economy

Features & Benefits

three qualities which make Cablofil Wiremesh Cable Tray system preferred by installers. Cablofil adapts to the most complex configurations, and its structure gives maximum strength for minimum weight. The ease of creating fittings, carried out on site, as well as the wide range of unique and universal accessories gives complete freedom in routing combined with exceptionally fast installation.

Specifications

General Info

Product Line	Cablofil	Finish	Custom Painted
UPC Number	800388008328	Country Of Origin	Italy
Type	Straight Sections		

Dimensions

Product Width US	17.114 in	Product Weight US	19.895 lb
Product Volume US	0.391 cu ft	Product Depth US	39.5 in
Product Height US	1.0 in		

Buy American Act Compliance

BAA	Yes