Cablofil

CABLOFIL COVER-WHITE (3 PCS) (2W) [945131]

Part No. 945131

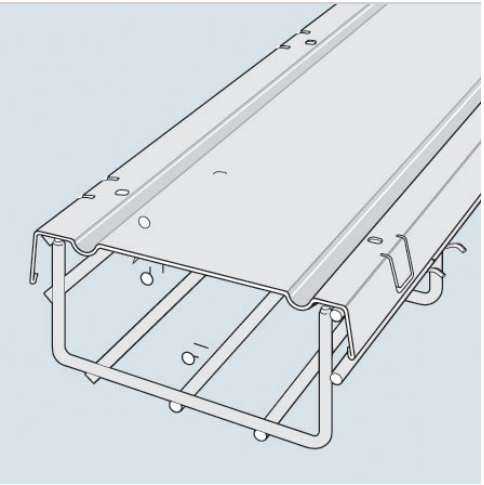

Cablofil Wiremesh Cable Tray concept based upon performance, safety and economy

Features & Benefits

Cablofil's Wiremesh Cable Tray concept is based on performance, safety, and economy. These three qualities make the Cablofil Wiremesh Cable Tray system preferred by installers

Structure provides maximum strength for minimum weight

Wide range of unique and universal accessories

Exceptionally fast installation

Cablofil adapts to the most complex configurations

Ease of creating fittings on-site

Complete freedom in routing

Specifications

General Info

Product Line	Cablofil	Finish	Painted
UPC Number	800388471559	Country Of Origin	Italy
Application Sector	Commercial, Industrial	Type	Covers

Dimensions

Product Width US	3.5 in	Product Weight US	4.27 lb
Product Volume US	0.08 cu ft	Product Depth US	39.5 in
Product Height US	1.0 in		

Buy American Act Compliance

BAA	Yes

Additional Information

RoHS Compliant	Yes