Wiremold

AMD8 Communications Poke-Thru Device Abandonment Plate

Part No. AMD8APTCBK

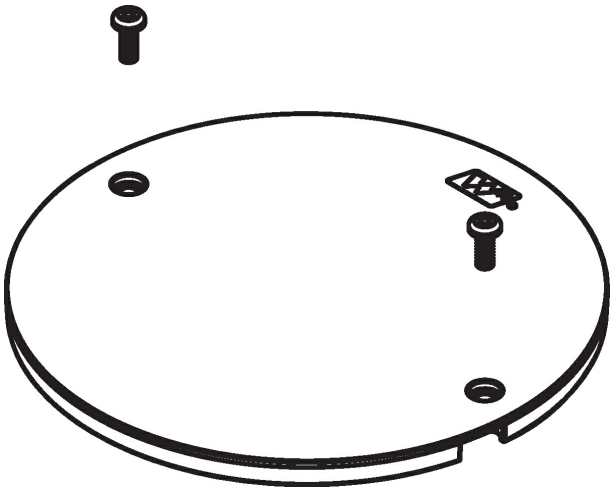

Available in gray (GY), and black (BK). NOTE: AMD8 Series Poke-Thru Devices require a 4'' (102mm) diameter hole. Not designed to work with bare concrete or terrazzo. Floor covering thickness 1/8'' minimum.

Features & Benefits

Available in gray (GY), and black (BK). NOTE: AMD8 Series Poke-Thru Devices require a 4'' (102mm) diameter hole. Not designed to work with bare concrete or terrazzo. Floor covering thickness 1/8'' minimum.

Specifications

General Info

Product Line	Wiremold	UPC Number	786564024699
Country Of Origin	Mexico	Construction	Not Assembled
Application Sector	Commercial	Standard	cULus Listed Metallic Outlet Boxes: File E2961 Guide QCIT. cULus Listed Nonmetallic Outlet Boxes & Fittings Classified for Fire Resistance: File R8209 Guide CEYY. Meets Article 300.21 & 300.22(C) & 314 of NEC.
Type	Poke-Thru		

Listing Agencies / 3rd Party Agencies

cULus ListingNumber	E2961	cULus Listed	Yes

Buy American Act Compliance

NAFTA	Yes

Additional Information

RoHS Compliant	Yes