Cablofil
Discontinued - Straight Horizontal Divider
Part No. P083515

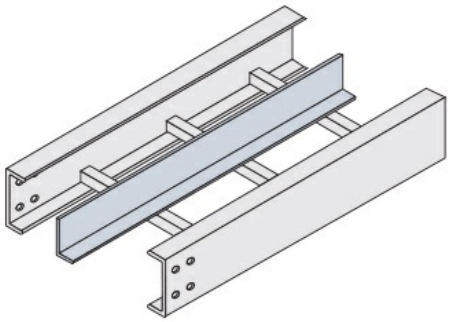

null

Features & Benefits

Straight strips are for use with all straight tray

Specifications

General Info

Product Line	Cablofil	Finish	Aluminum
UPC Number	800388516533	Country Of Origin	Mexico

Dimensions

Product Width US	0.875 in	Product Weight US	4.508 lb
Product Volume US	0.273 cu ft	Product Depth US	144.0 in
Product Height US	3.75 in		

Buy American Act Compliance

BAA	Yes