Cablofil

I-Beam Hold Down Clamp/Expansion Guide

Part No. P600427

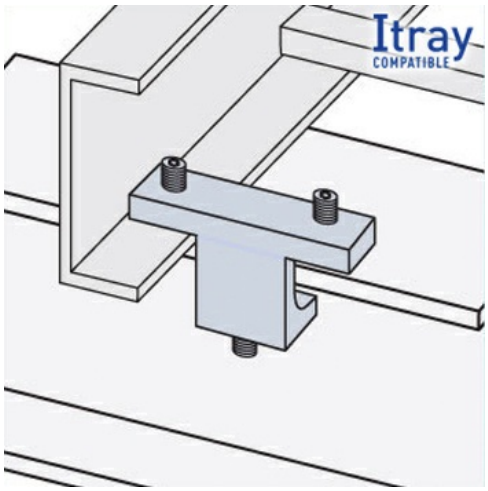

The aluminum I-beam design of ITray is perfect for industrial installations with large diameter cables in long span situations, minimizing total tray width and creating a smooth transition between straight sections and fittings. A structural offset in the sidewall creates strong, mid-span splices that need fewer supports. Each splice snaps in place and stays without holding, Additionally, only four bolts are needed for each splice reducing hardware needs by 50%. These features allow Itray to be installed up to 30% faster than standard tray.

Features & Benefits

Designed for use with all trays.

Specifications

General Info

Product Line	Cablofil	Finish	S6
UPC Number	800388524682	Country Of Origin	Mexico
Application Sector	Commercial, Industrial	Type	Cable Tray

Dimensions

Product Width US	3.0 in	Product Weight US	0.72 lb
Product Volume US	0.01 cu ft	Product Depth US	2.0 in
Product Height US	2.865 in		