Cablofil
Single Hanger Channel
Part No. P642558

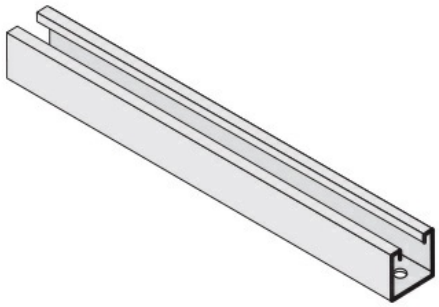

The aluminum I-beam design of ITray is perfect for industrial installations with large diameter cables in long span situations, minimizing total tray width and creating a smooth transition between straight sections and fittings. A structural offset in the sidewall creates strong, mid-span splices that need fewer supports. Each splice snaps in place and stays without holding, Additionally, only four bolts are needed for each splice reducing hardware needs by 50%. These features allow Itray to be installed up to 30% faster than standard tray.

Features & Benefits

Made from 12-gauge strut

Hangers have 9/16'' diameter holes 13/16'' from each end to accept 1/2'' threaded rod

When used with Z-type hold-down clamps, select hanger with flange out dimensions

Specifications

General Info

Product Line	Cablofil	Finish	Stainless 316

Dimensions

Product Weight US	3.516 lb