Wiremold

WORK SURFACE MOD POWER KIT 72IN TABLE, 2 PORTAL, BLACK COVER

Part No. WSMPDUT72BKDK

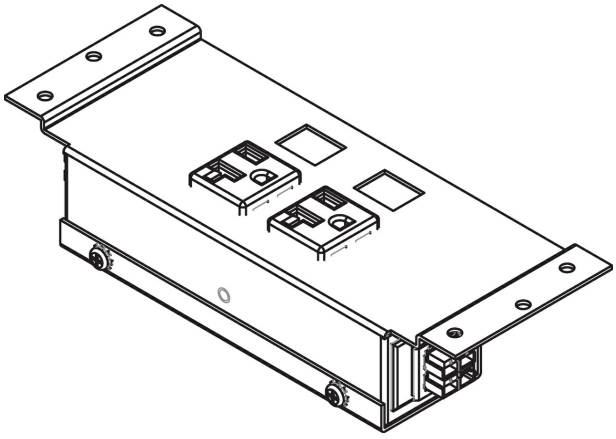

Kit contains two 4 wire, 2 circuit connectorized cables each 27'' in length (one M/F and one F/F) with black cable covers and 4 cable clamps for mounting, one black work surface portal with 2 power and 2 keystone openings for communications. Portal is wired for circuit 1. For circuit 2 wired portals, order the ''-2'' suffixed part number.

Features & Benefits

This product meets the material restrictions of RoHS

Specifications

General Info

Product Line	Wiremold	UPC Number	786776184624
Application Sector	Commercial		

Listing Agencies / 3rd Party Agencies

CSA Listed	Yes

Additional Information

RoHS Compliant	Yes